Current part is item (6) on diagram. Available at www.oshkoshequipment.com

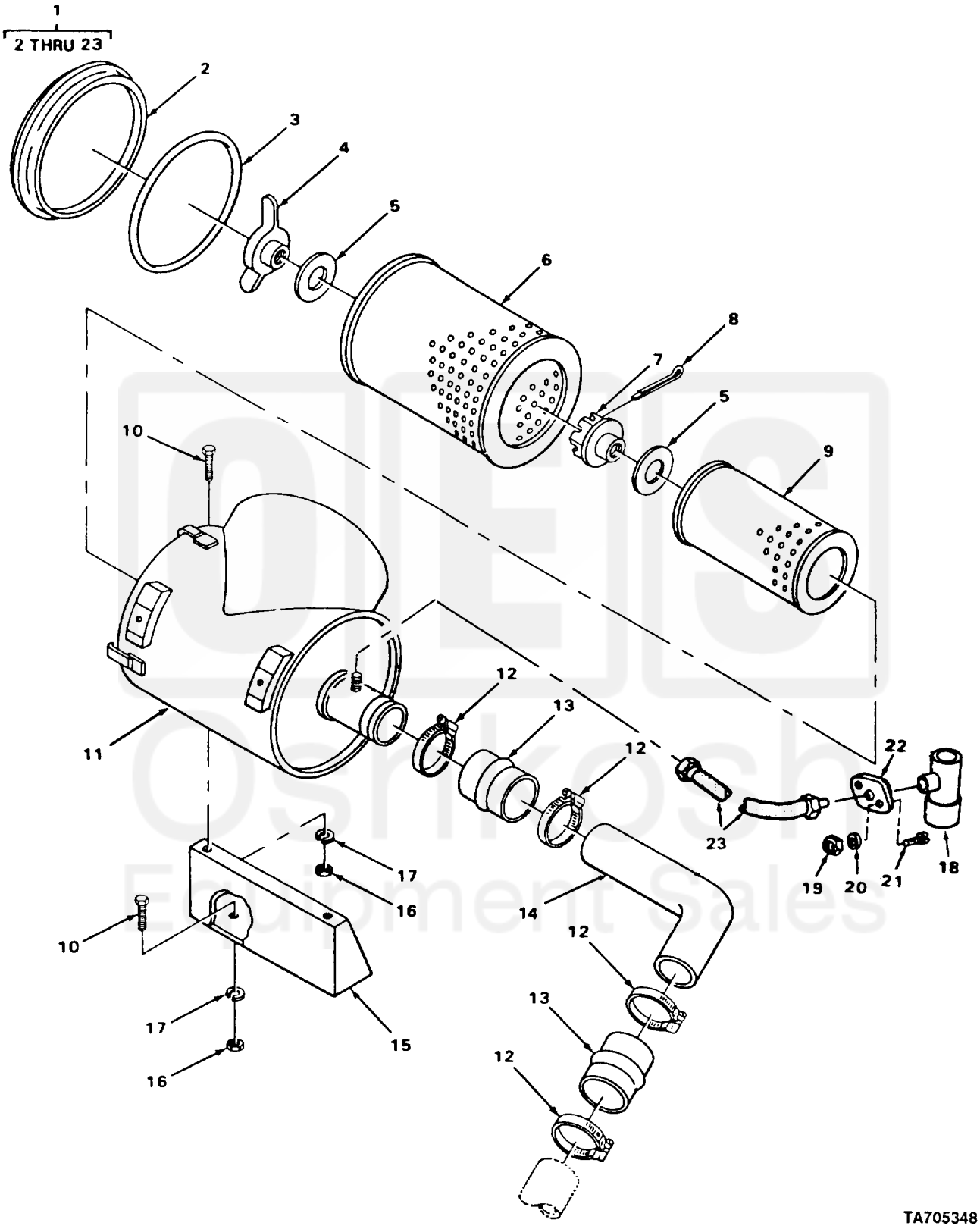

FIGURE 22. AIR CLEANER ASSEMBLY

Current part is item (6) on diagram. Available at www.oshkoshequipment.com

Current part is item (6) on diagram. Available at www.oshkoshequipment.com

(1) ITEM NO	(2) SMR CODE	(3) CAGEC	(4) PART NUMBER	(5) DESCRIPTION AND USABLE ON CODES (UOC)	(6) QTY
				GROUP 0304 AIR CLEANER	
				FIG. 22 AIR CLEANER ASSEMBLY	
1	PFOZZ	18265	STG12-0155	AIR CLEANER,INTAKE	1
2	PFOZZ	18265	P10-9194	.COVER ASSEMBLY,AIR AIR CLEANER	1
3	PFOZZ	18265	P01-7365	.GASKET FILTER BODY	1
4	PFOZZ	18265	P10-9062	.NUT,PLAIN,WING AIR CLEANER	1
5	PFOZZ	18265	P10-5740	.GASKET	2
6	PAOZZ	37099	LAF9200	.FILTER ELEMENT,INTA PRIMARY	1
7	PFOZZ	18265	P10-9063	.NUT AIR CLEANER	1
8	XDOZZ	18265	P10-9107	.PIN,COTTER AIR CLEANER	1
9	PAOZZ	18265	P11-9371	.FILTER ELEMENT,INTA SAFETY	1
10	PFOZZ	96906	MS18154-58	.SCREW,CAP,HEXAGON H AIR CLEANER SUPPORT	6
11	PFOZZ	18265	P12-4297	.AIR CLEANER,INTAKE AIR CLEANER	1
12	PFOZZ	96906	MS35842-16	.CLAMP,HOSE BODY TO INTAKE TUBE PART OF KIT P/N 13220E6805	4
13	PFOZZ	18265	P10-5609	.HOSE,PREFORMED INTAKE	2
14	XAOZZ	04285	P72787	.TUBE,INTAKE AIR	1
15	XBOZZ	04285	W72771	.SUPPORT AIR CLEANER FRONT	1
16	PFOZZ	96906	MS51967-8	.NUT,PLAIN,HEXAGON AIR CLEANER SUPPORT MOUNTING	6
17	PAOZZ	96906	MS35338-046	.WASHER,LOCK AIR CLEANER SUPPORT MOUNTING	6
18	PAOZZ	18265	RBX00-2225	.INDICATOR,SIGHT,LTQ UOC:CMP,CMQ,CQK	1
19	PAOZZ	52659	0N311	.NUT,PLAIN,HEXAGON UOC:CMP,CMQ,CQK	2
20	PFOZZ	83298	B20500-11	.WASHER,LOCK UOC:CMP,CMQ,CQK	2
21	PFOZZ	96906	MS35206-267	.SCREW,MACHINE UOC:CMP,CMQ,CQK	2
22	PFOZZ	18265	P10-5168	.FLANGE,RESTRICTION UOC:CMP	1
23	PFOZZ	63906	4GAB2MB2UFB018	.HOSE ASSEMBLY,NONME UOC:CMP,CMQ,CQK	1
				END OF FIGURE	

Current part is item (6) on diagram. Available at www.oshkoshequipment.com